Angle Seat Valve / Air Operated Type

New

RoHS

Low pressure loss due to angle seat structure!

Long service life

Air **Water**

10 million cycles

Steam

3 million cycles

* Based on SMC's test conditions (for JSB21)

Large flow rate p. 1

A large flow rate is possible due to the optimized flow channel shape. (Cv factor: approx. 2.5 times)

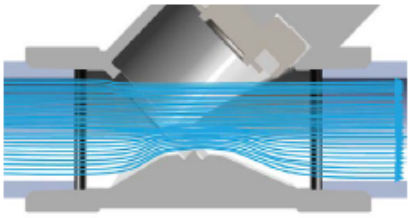

* Port size: 1" (25A)

Compact

* Port size: 1"

Abundant series variations of 7 sizes

Size	Port size	Cv factor	Body material	Fluid temperature [°C]	
				Water, Air	Steam
1	3/8 (10A)	5.0	Stainless steel 316L equivalent	99 or less	183 or less
2	1/2 (15A)	8.0			
3	3/4 (20A)	16.0			
4	1" (25A)	29.1			
5	1 1/4" (32A)	41.3			
6	1 1/2" (40A)	59.5			
7	2" (50A)	87.5			

JSB Series

SMC

CAT.ES70-62A

Angle Seat Valve / Air Operated Type

JSB Series

For Air For Water For Steam

RoHS

How to Order

JSB 4 1 – S T 25A R – 4 S

❶ ❷ ❸ ❹ ❺ ❻ ❼ ❽

❶ Valve size

Symbol	Series
1	10
2	20
3	30
4	40
5	50
6	60
7	70

❷ Valve type

Symbol	Valve type
1	N.C.

❸ Body material

Symbol	Material
S	Stainless steel

❹ Seal material

Symbol	Material
T	Fluororesin

❺ Port size

Symbol	Port size	❶ Valve size						
		1	2	3	4	5	6	7
10A	3/8	●						
15A	1/2		●					
20A	3/4			●				
25A	1				●			
32A	1 1/4					●		
40A	1 1/2						●	
50A	2							●

❻ Thread type

Symbol	Thread type
R	Rc
N	NPT
F	G

* The pilot and breathing ports have the same thread type as the main port.

❼ Head size

Symbol	Bore size	❶ Valve size						
		1	2	3	4	5	6	7
2	ø40	●	●					
3	ø50			●				
4	ø63				●			
5	ø80					●		
6	ø100						●	
7	ø125							●

❽ Head material

Symbol	Material
S	Stainless steel

Standard Specifications

Valve specifications	**Valve construction**	Air operated piston type
	Withstand pressure	2.4 MPa
	Body material	Stainless steel 316L equivalent
	Seal material	Fluororesin
	Environment	Location without corrosive or explosive gases

Flow Rate Characteristics N.C. (Normally closed)

Valve size	Port size	Flow rate characteristics*1		Max. operating pressure [MPa]	Pilot pressure [MPa]	Model	Weight [g]
		Kv	Cv				
1	3/8 (10A)	4.3	5.0	1.0	0.5 to 1.0	**JSB11-ST10A□-2S**	780
2	1/2 (15A)	6.9	8.0	1.0	0.5 to 1.0	**JSB21-ST15A□-2S**	850
3	3/4 (20A)	13.8	16.0	1.0	0.5 to 1.0	**JSB31-ST20A□-3S**	1350
4	1" (25A)	25.2	29.1	1.0	0.5 to 1.0	**JSB41-ST25A□-4S**	2100
5	1 1/4" (32A)	35.7	41.3	1.0	0.5 to 1.0	**JSB51-ST32A□-5S**	3700
6	1 1/2" (40A)	51.5	59.5	1.0	0.5 to 1.0	**JSB61-ST40A□-6S**	5400
7	2" (50A)	75.7	87.5	1.0	0.5 to 1.0	**JSB71-ST50A□-7S**	8700

*1 The values are based on SMC's measurement conditions (JIS B 2005-1:2012).
* When using steam as fluid, see page 7 for selecting the pilot piping option.

Symbol

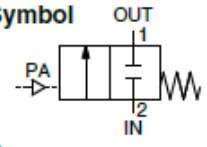

Fluid and Ambient Temperatures

Fluid temperature [°C]	Ambient temperature [°C]
Steam: 183 or less Water, Air: 99 or less	0 to 60

∗ No freezing

Valve Leakage Rate

Internal Leakage

Fluid	Seal material	Leakage rate∗1
Steam, Air	Fluororesin	10 cm³/min or less∗2
Water		1 cm³/min or less

External Leakage

Fluid	Seal material	Leakage rate∗1
Steam, Air	Fluororesin	10 cm³/min or less∗2
Water		1 cm³/min or less

∗1 Leakage is the value at an ambient temperature of 20°C.
∗2 With air

Construction

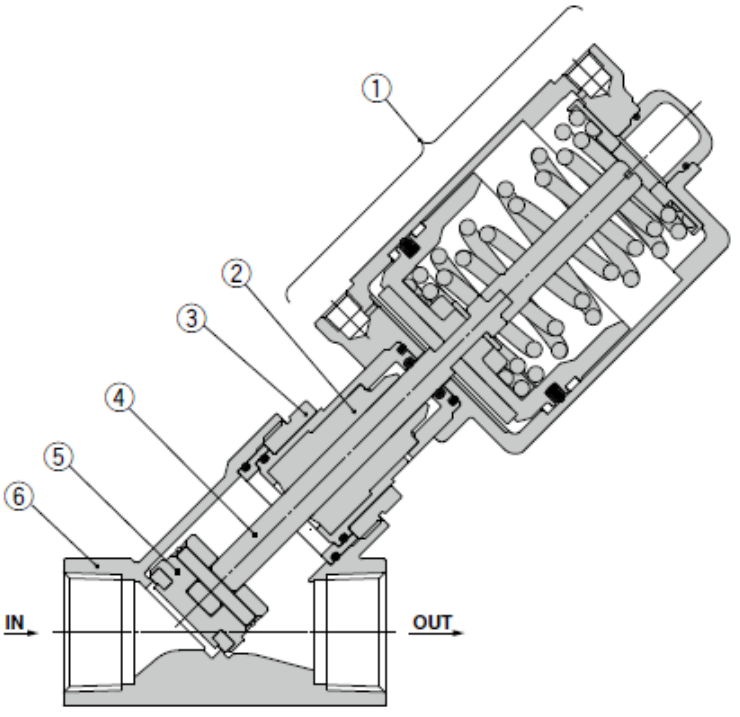

Component Parts

No.	Description	Material
1	**Pilot head assembly**	Stainless steel 304 equivalent, Iron, Resin, FKM
2	**Shaft seal holder assembly**	Stainless steel 316L, Fluororesin, PEEK, FKM, Resin
3	**Body nut**	Stainless steel 304 equivalent
4	**Rod**	Stainless steel 316L
5	**Valve element assembly**	Stainless steel 316L, Fluororesin
6	**Body**	Stainless steel 316L equivalent

∗ Materials of parts in contact with fluid: Stainless steel 316L equivalent, Fluororesin, PEEK, FKM

Dimensions

JSB11, 21

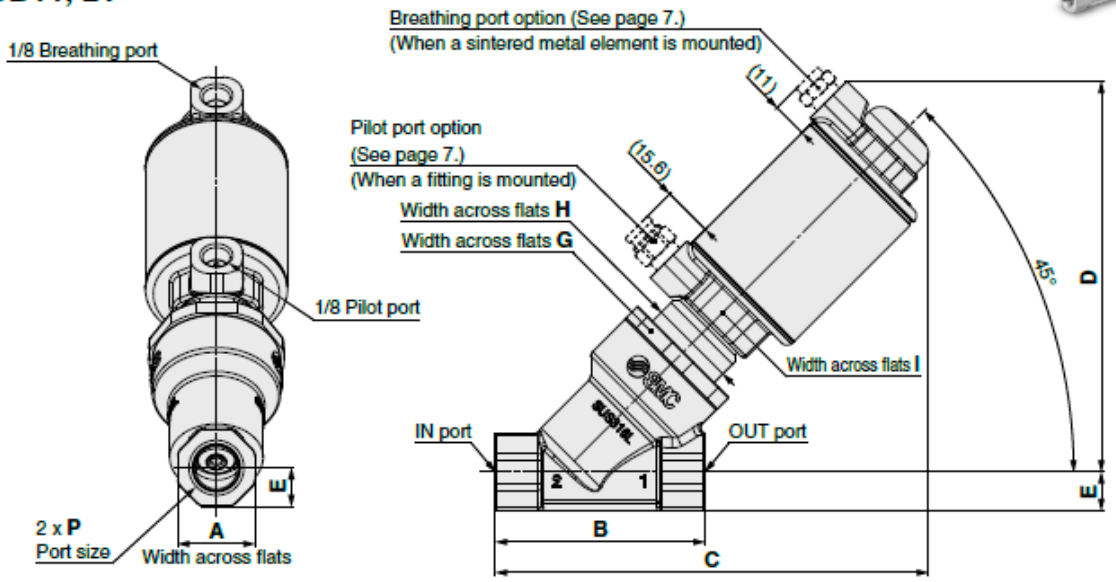

Dimensions [mm]

Model	Port size P	A	B	C	D	E	F	G	H	I
JSB11	3/8	24	65	134.4	121.3	12	44	40	27	27
JSB21	1/2	29	65	134.9	122.3	14.5	44	40	27	27

JSB31, 41

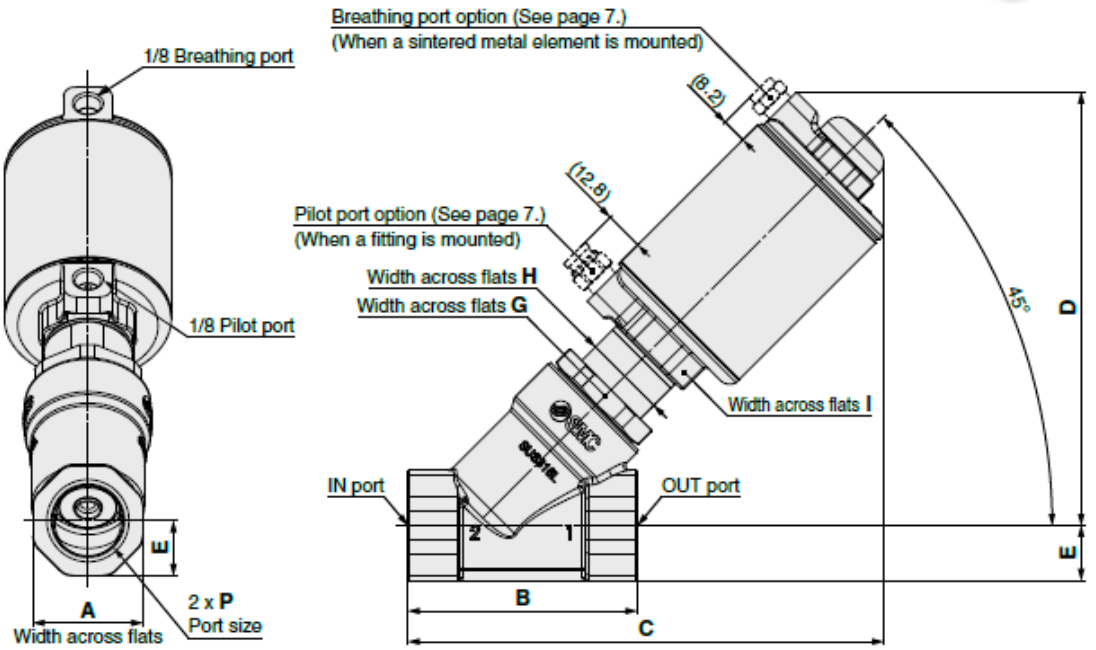

Dimensions [mm]

Model	Port size P	A	B	C	D	E	F	G	H	I
JSB31	3/4	36	75	155.7	141.9	18	54.6	35	27	30
JSB41	1	41	90	188	166	20.5	68	46	29	36